gunt HAMBURG

H_2SKILLS

Green hydrogen expertise



Green hydrogen technology

Future expertise for education

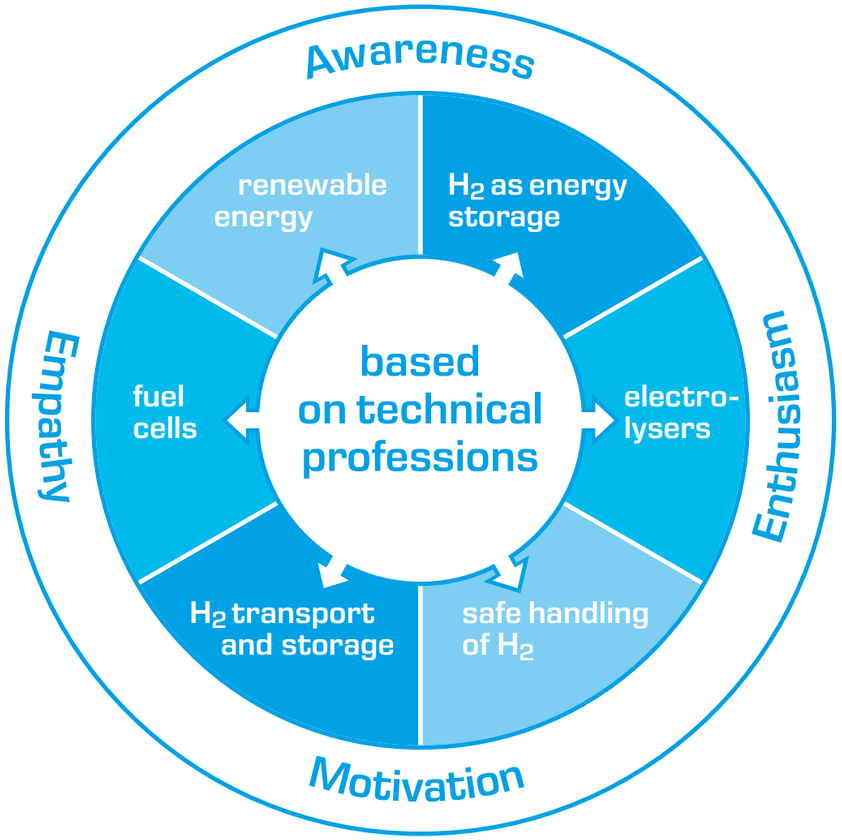

GUNT's teaching and learning structure

Hydrogen is considered a key technology for combating Climate Change in the Net Zero Industry Act. The production, storage and application of hydrogen in industry and the energy sector require specialists from the metal, electrical, process engineering and skilled trades. Specific knowledge and the necessary skills for hydrogen technology are built on the basis of technical professions.

At GUNT, we have made expertise development in vocational training our most important task. While founded on theoretical knowledge, we are committed to a practical approach. We are a leader in the development of expertise in the field of green hydrogen and are actively involved in the development and implementation of a hydrogen expertise strategy.

Imprint

© 2026 G.U.N.T. Gerätebau GmbH. Any reuse, storage, duplication and reproduction – even in extracts – is prohibited without written approval. GUNT is a registered trademark. Our products are protected by and subject to copyright law.

No liability can be accepted for printing errors. Subject to change without notice.

Image credits: G.U.N.T. Gerätebau GmbH, manufacturers' photos. Printed on chlorine-free, environmentally friendly paper.

Future expertise for education – experience green hydrogen technology

H_2SKILLS
Green hydrogen expertise

The GUNT range of units for the development of **H_2SKILLS** enables future specialists in the hydrogen industry to receive practical training. For teachers, the hydrogen devices are didactically incorporated into the classroom to ensure the effective transfer of knowledge.

The value chain of hydrogen in industry	04
Upstream	
ET 278 Principles of the H_2 circuit (PEM)	06
ET 282 Industrial electrolyser for H_2 (PEM)	10
ET 280 Modular electrolyser for H_2 (AEM)	14
CE 585 Water purification process	18
CE 530 Reverse osmosis	19
Midstream	
H_2 purification: drying hydrogen after electrolysis	20
CE 540 Adsorptive air drying	21
H_2 transformation: nitrogen production for synthesis of e-ammonia	22
CE 545 N_2 – Pressure swing adsorption PSA	22
CE 550 N_2 – Membrane separation process	23
MT 220 Assembly station gas booster in hydrogen technology	24
Downstream	
ET 292 Fuel cell system	28
Product overview	30

Hydrogen Energy Association

HydrogenScotland

H_2SKILLS
www.gunt.de

Upstream | Midstream | Downstream

The value chain of hydrogen in industry



ET 280 Modular electrolyser for H_2 (AEM)



ET 255.02 Photovoltaic modules

ET 255.04 Wind power plant

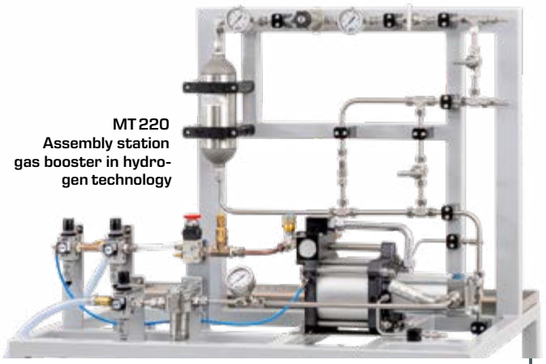

MT 220 Assembly station gas booster in hydrogen technology



ET 292 Fuel cell system

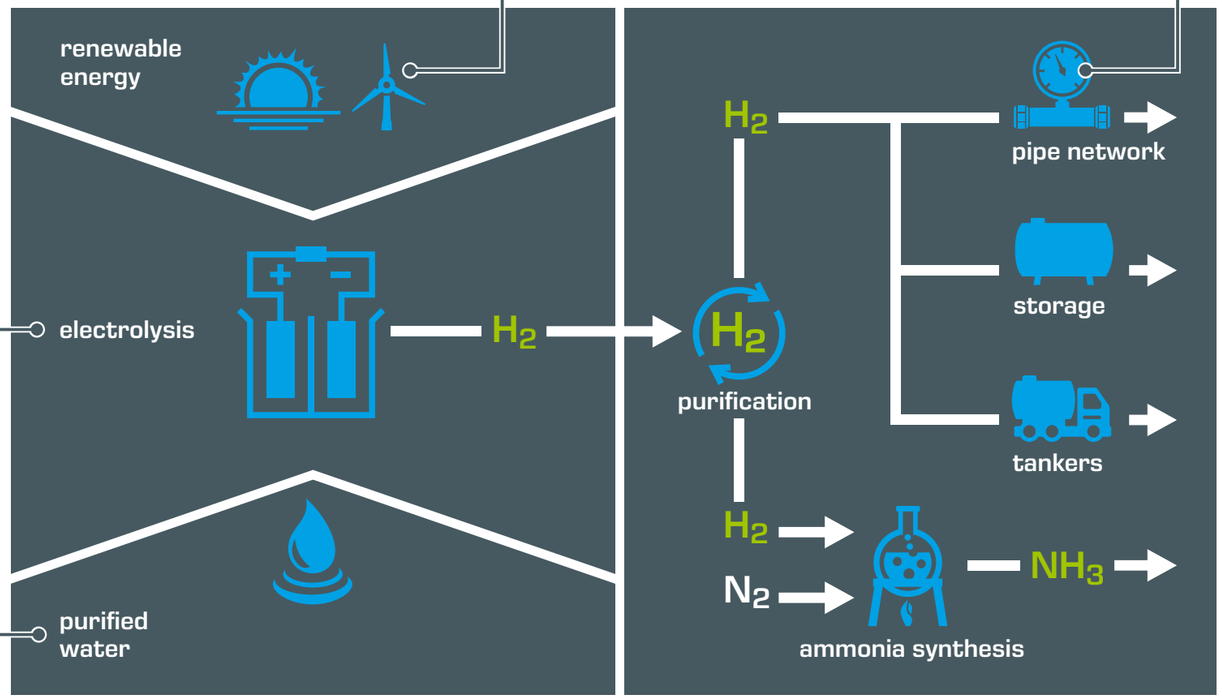

To **produce** green hydrogen, purified water is broken down into hydrogen and oxygen in an electrolyser using renewable energy. The water quality is determined by the specifications of the electrolyser.

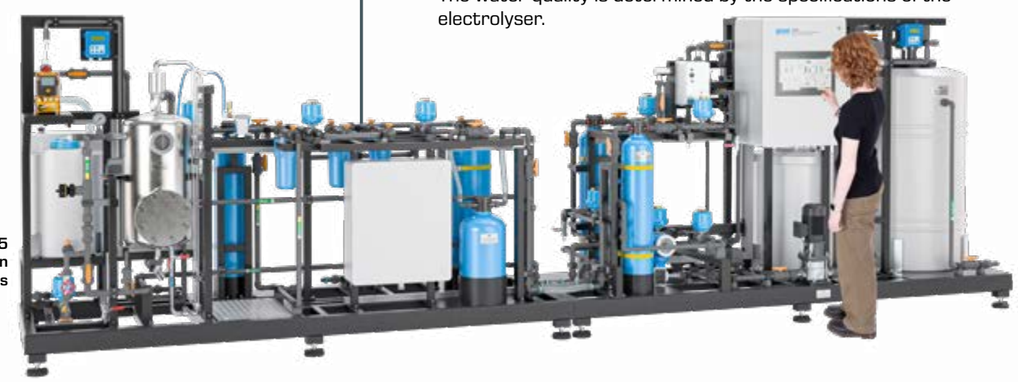

CE 585 Water purification process

To protect downstream processes, the hydrogen produced is first **purified**. It is then **transported** to end consumers. To increase the energy density hydrogen can be **transformed** into e-ammonia.



CE 545 N_2 – Pressure swing adsorption PSA

In **end use**, hydrogen and its derivatives are primarily used as raw materials in industry, as fuel for transport, for heating and as a source of electricity generation.

Upstream | Midstream | Downstream

about the product

ET 278 Principles of the H_2 circuit (PEM)

To optimise energy supply systems, excess electrical energy from renewable sources is temporarily stored as chemical energy in the form of hydrogen in networked energy supply systems. The hydrogen circuit enables hydrogen to be stored and, when needed, converted back into electrical energy. Doing so balances out any deviations between energy supply and demand.

The trainer contains all the components needed to study the conversion of electrical energy into hydrogen and the reverse conversion in a complete circuit.

- PEM electrolyser for hydrogen production
- PEM fuel cell for direct hydrogen consumption
- recording of electrical power, volumetric flow rate and pressure with energy balance

The plant is controlled by an integrated PLC with touch screen. Relevant parameters are calculated from the monitored measured values and the energy balance is determined.

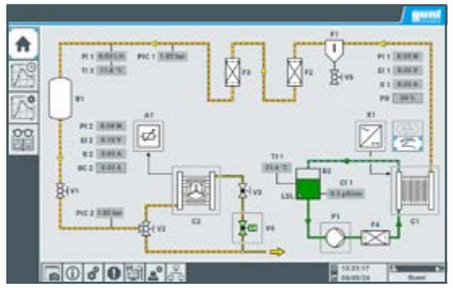

Screenshot of the PLC

Process for hydrogen production

For the production of hydrogen, GUNT offers two different types of electrolysers: using anion exchange membrane (AEM) or proton exchange membrane (PEM).



The GUNT Skills Media Center

MEDIA center SKILLS

Digital data packages are available on GUNT's own didactic platform:

- fast and targeted retrieval of information
- selected according to didactic criteria
- helpful in the development of digital skills
- classical learning content supplemented by digital content and methods

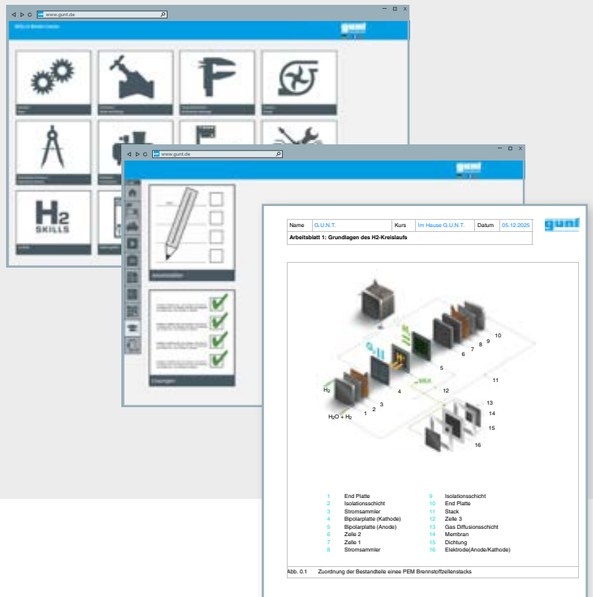

Learning objectives / experiments

- H_2 circuit: conversion of electrical energy into chemical energy (hydrogen) and back into electrical energy
- generation of H_2 using a PEM electrolyser
- generation of electrical energy using a PEM fuel cell for direct H_2 consumption
- relationships between the operating parameters of the electrolyser
- calculation of the relevant parameters
- determination of the energy balance

Upstream | Midstream | Downstream

ET 278 H_2 circuit: electrolyser and fuel cell

Hydrogen is produced from purified water with a specific conductivity in a PEM electrolyser. A proton exchange membrane is used to break down water (H_2O) into hydrogen (H_2) and oxygen (O_2). The electrical energy required for this is provided by a DC voltage source.

After purifying, the hydrogen produced is temporarily stored in a buffer tank. The stored hydrogen is then converted back into water in a PEM fuel cell, together with oxygen from the ambient air. This produces electrical energy and closes the hydrogen circuit. The electrical energy is used to power a halogen lamp as the end consumer.

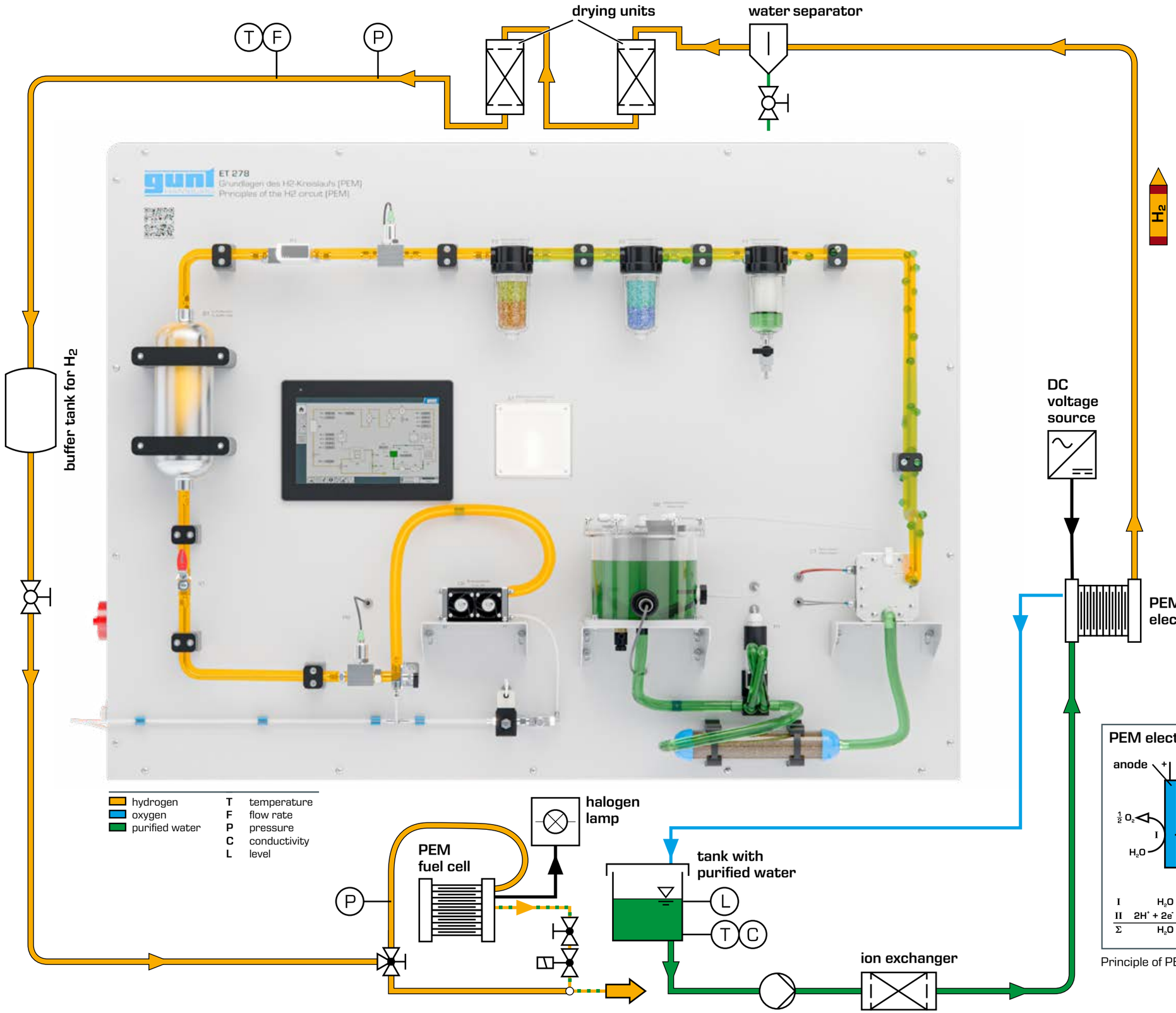

PEM fuel cell

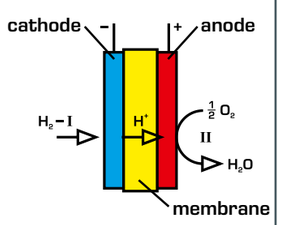

I $H_2 \rightarrow 2H^+ + 2e^-$
II $2H^+ + \frac{1}{2}O_2 + 2e^- \rightarrow H_2O$
Σ $H_2 + \frac{1}{2}O_2 \rightarrow H_2O$

Principle of PEM fuel cell

PEM electrolyser

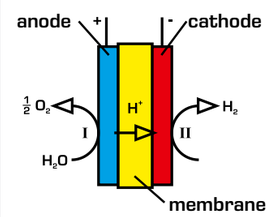

I $H_2O \rightarrow 2H^+ + \frac{1}{2}O_2 + 2e^-$
II $2H^+ + 2e^- \rightarrow H_2$
Σ $H_2O \rightarrow H_2 + \frac{1}{2}O_2$

Principle of PEM electrolysis

Upstream | Midstream | Downstream

ET 282 Industrial electrolyser for H_2 (PEM)

The experimental plant contains all the components needed to study hydrogen production on an industrial scale. The typical process stages are divided into: water purification, hydrogen production, hydrogen purification and storage of hydrogen. The hydrogen from the buffer tank can be filled into a gas cylinder for further use.

The plant is controlled and process data recorded via a process control system with GUNT software.

- powerful PEM electrolyser for hydrogen generation, **5kW** power
- closed water circuit with: ion exchange, preheating, conductivity analysis
- monitoring the individual cell voltages on the stack for preventive maintenance
- detection of hydrogen flow rate, temperature and pressure

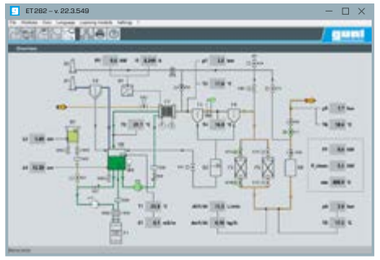

GUNT software screenshot

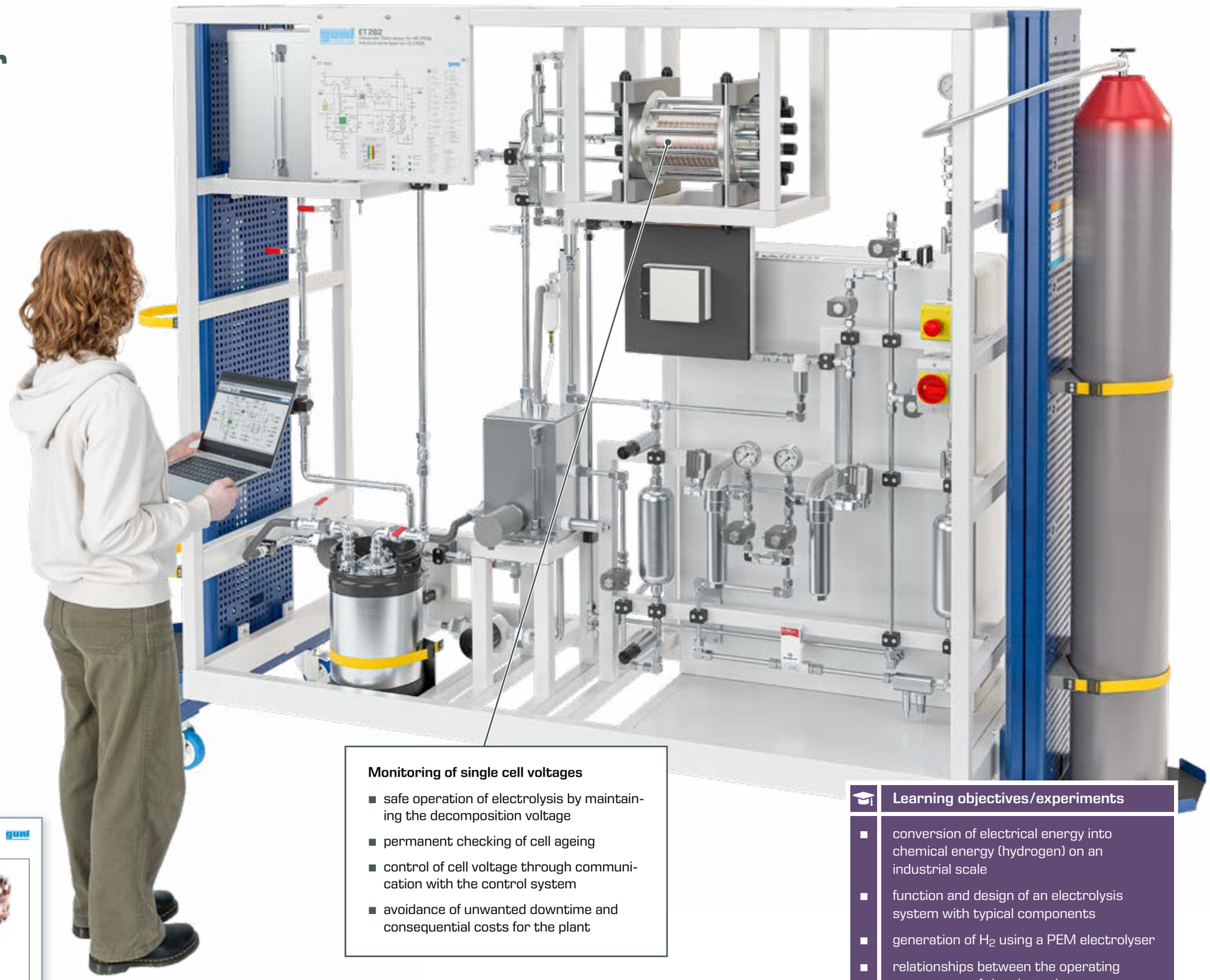

Monitoring of single cell voltages

- safe operation of electrolysis by maintaining the decomposition voltage
- permanent checking of cell ageing
- control of cell voltage through communication with the control system
- avoidance of unwanted downtime and consequential costs for the plant

about the product

The GUNT Skills Media Center

Digital data packages are available on GUNT's own didactic platform:

- functional videos
- maintenance exercises with password-protected solutions
- data sheets for the components
- manual

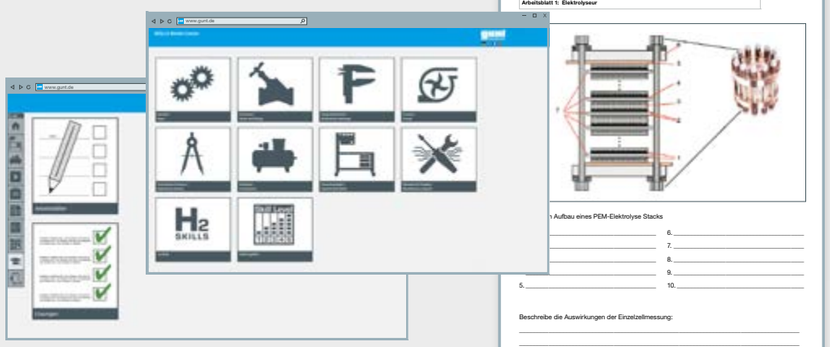

Learning objectives/experiments

- conversion of electrical energy into chemical energy (hydrogen) on an industrial scale
- function and design of an electrolysis system with typical components
- generation of H_2 using a PEM electrolyser
- relationships between the operating parameters of the electrolyser
- how power level affects electrolysers
- recording and visualisation of all relevant characteristics
- calculation of the relevant parameters
- determination of the energy balance

Upstream | Midstream | Downstream

ET 282 Hydrogen production with real industrial components

Water purification

PEM electrolysis

Measuring instruments, safety with H_2

Drying

Storage

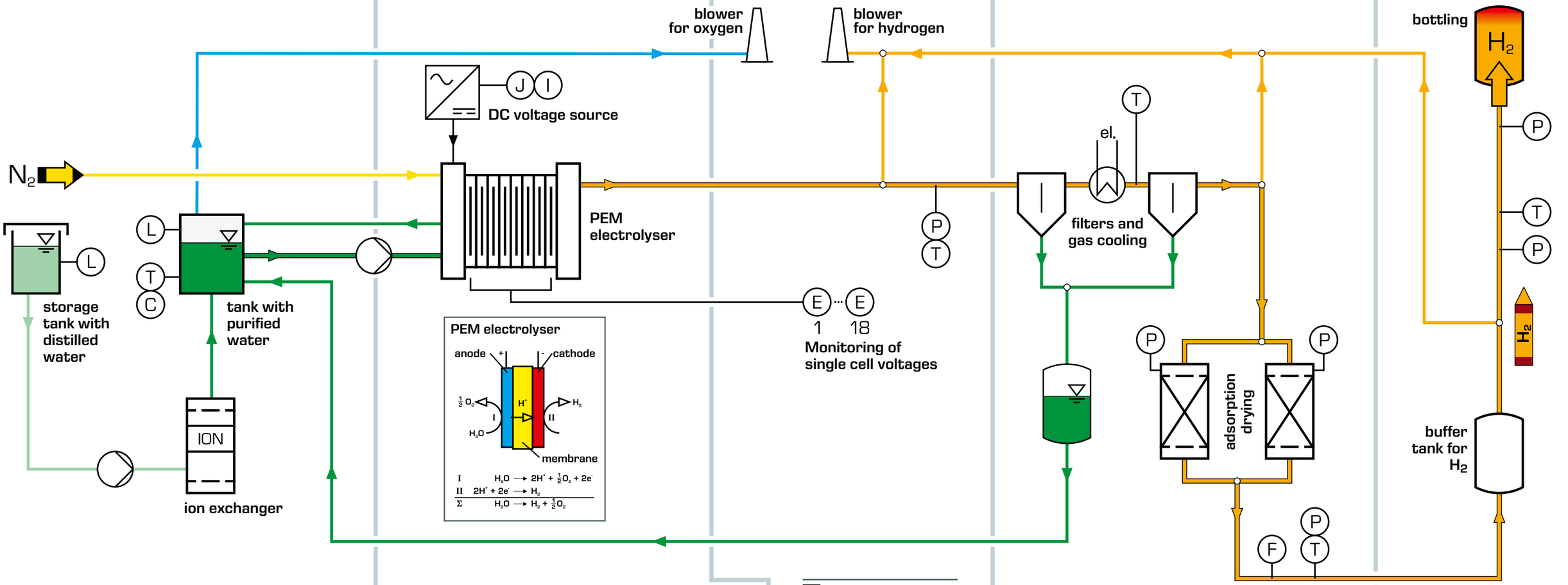



- closed water circuit
- tank with heater for preheating the water
- ion exchanger for adjusting the conductivity
- continuous conductivity analysis



- electrolysis stack with 18 cells
- Catalyst Coated Membrane (CCM) with increased platinum loading
- purging with nitrogen via separate connection possible, e.g. for maintenance work



- droplet separator for coarse separation of the water
- cooling section with downstream coalescence filter
- removal of residual moisture via two adsorbers in alternating operation



gas cylinder for bottling H_2

Upstream | Midstream | Downstream

ET 280 Modular electrolyser for H_2 (AEM)

In AEM electrolysis, water (H_2O) is broken down into hydrogen (H_2) and oxygen (O_2) using the anion exchange membrane. The trainer contains an electrolyser with a stack consisting of several bipolar cells connected in series.

- raw water purification by reverse osmosis and ion exchange
- air-cooled electrolyser with tank for potassium hydroxide solution
- generated hydrogen is safely flared off at the end of the experiment

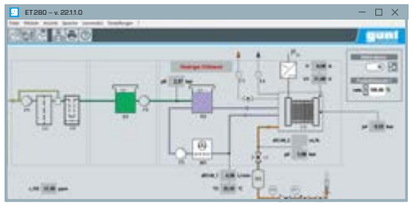

GUNT software screenshot



ET 280
Modular electrolyser for H_2 (AEM)

Hydrogen electrolysis with electricity from renewable energies

The production of hydrogen using energy from renewable sources is considered a key process for a sustainable economy.

Combining the ET 280 modular electrolyser with the ET 255 energy system for solar and wind power enables the overall efficiency of the system to be studied and forms the basis for planning needs-based grid coverage.



ET 255.04
Wind power plant



ET 255.02
Photovoltaic modules, illumination by sunlight or HL 313.01 light source

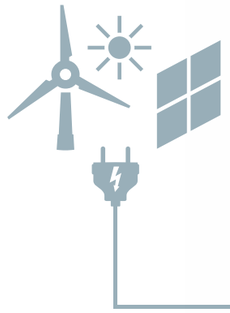

ET 255
Energy system for solar and wind power

The GUNT Skills Media Center

MEDIA center SKILLS

Digital data packages are available on GUNT's own didactic platform:

- functional videos
- exercises on energy balance
- manual

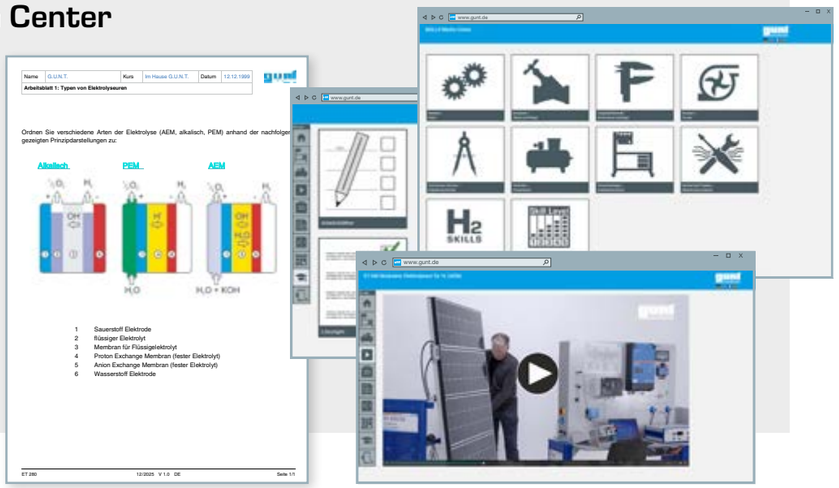

Learning objectives/experiments

- conversion of electrical energy into chemical energy
- function and design of an electrolysis system for the production of H_2
- relationships between the operating parameters of the electrolyser
- how power level affects electrolysers
- recording and visualisation of all relevant characteristics
- calculation of the relevant parameters
- determination of the energy balance

about the product
WWW

Upstream | Midstream | Downstream

ET 280 AEM electrolysis and water purification

Renewable energies

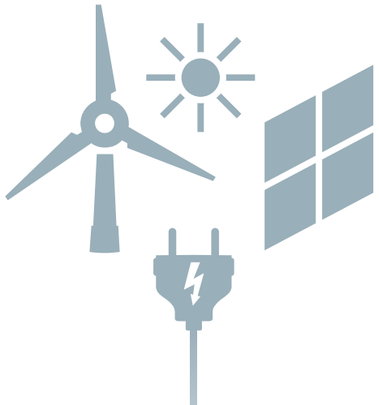

Water purification

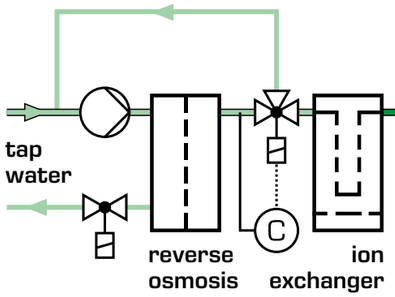



- raw water purification by reverse osmosis
- water softening using an ion exchanger
- use with standard laboratory tap water

Water storage

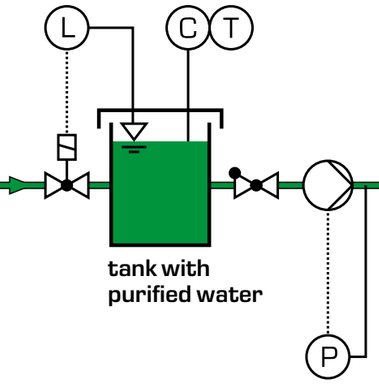



- storage tank for purified water
- maintenance-free operation
- measurement of conductivity and fill level

AEM electrolysis

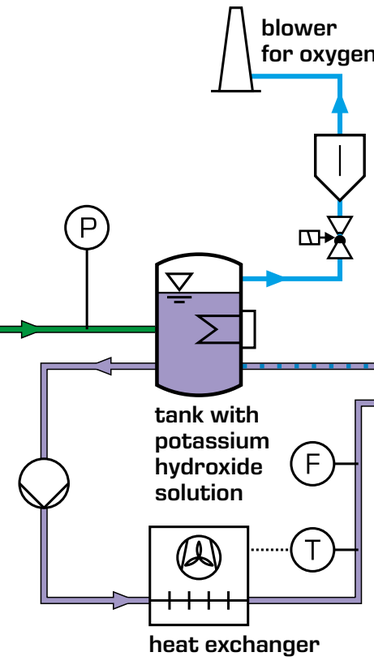



- electrolysis stack with 24 cells
- tank with potassium hydroxide solution
- dry and pure hydrogen approx. 99.9%
- integrated control unit for automated operation

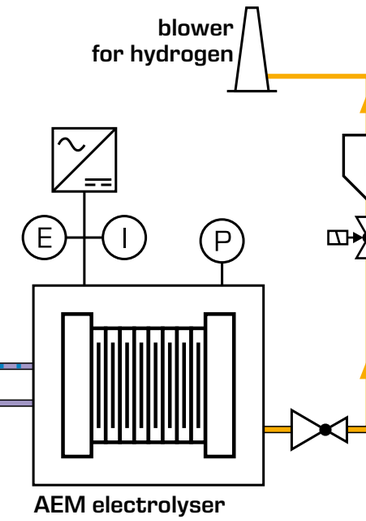

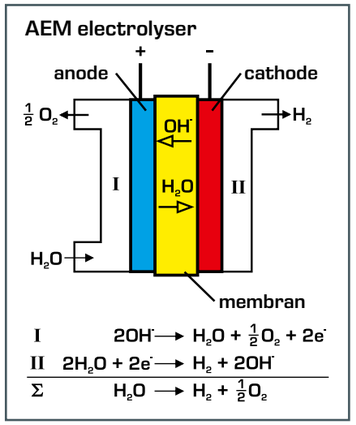

Principle of AEM electrolysis

Thermal energy

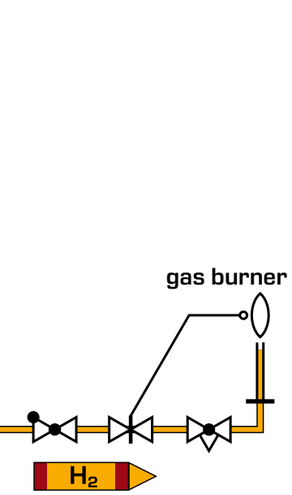

- hydrogen
- oxygen
- tap water
- purified water
- potassium hydroxide solution

T temperature
F flow rate
P pressure
L level
C conductivity
I current
E voltage

Upstream | Midstream | Downstream

about the product

CE 585
Water purification process

CE 585 is one of the Industrial Application Projects from the GUNT-TVET programme. Students learn extensive operating functions and maintenance work on this industry standard, multi-stage water purification plant.

Raw water is purified in the plant. The water quality required for the production of hydrogen is determined by the specifications of the electrolyser.

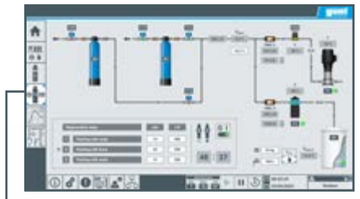

Screenshot from the PLC



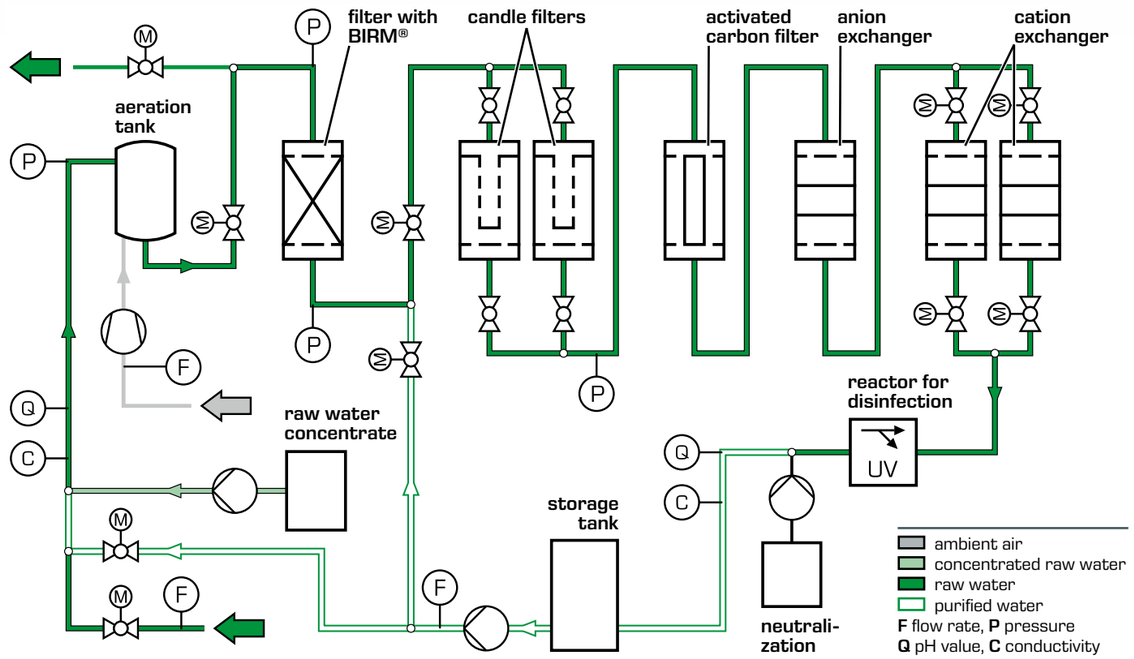

The GUNT Skills Media Center

MEDIA center SKILLS

Digital data packages are available on GUNT's own didactic platform.

Learning objectives/experiments

- operation of an industrial-scale water treatment plant
- setting and monitoring important process variables
- detecting malfunctions
- carrying out and documenting maintenance work
- installation and removal of system components
- monitoring, determination and documentation of water analysis parameters

about the product

CE 530
Reverse osmosis

Purified water is required to produce hydrogen using electrolysis. The water quality is determined by the specifications of the electrolyser. This water quality can be achieved through water purification with reverse osmosis. CE 530 demonstrates the basic principle of reverse osmosis using a membrane separation process.

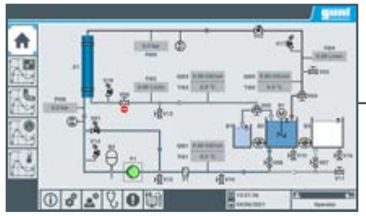

Screenshot of the PLC



Learning objectives/experiments

- assembly, cleaning and preservation of membrane modules
- basic principle of reverse osmosis, Van't Hoff's law
- permeate flow rate and retention capacity dependent on:
  - pressure in raw water
  - salt concentration in raw water
  - yield
- determination of diffusion coeffi-cients

Upstream | Midstream | Downstream

H_2 purification: drying hydrogen after electrolysis

When H_2 is produced by electrolysis, the hydrogen leaves the electrolyser with impurities. The hydrogen needs to be purified for transport, storage and utilisation as an energy source.

The main impurities in hydrogen are oxygen and water vapour. The water vapour is removed by drying. Mechanical and physical drying processes are used to do this.

GUNT device	Mechanical drying	Physical drying
ET 282 Industrial electrolyser for H_2 (PEM)	■ droplet separator ■ coalescence filter of the cooling section	■ adsorption (2 columns with silica gel fixed bed) ■ cooling section
ET 278 Principles of the H_2 circuit (PEM)	■ centrifugal separator with sinter filter	■ adsorption (2 columns with silica gel fixed bed)
Hydrogen production without purification		
ET 280 Modular electrolyser for H_2 (AEM)	■ no drying ■ the water content creates a visible flame pattern for safe flaring	

Principle of operation: adsorption of gases

The adsorption of gases is used to separate individual components from a gas mixture. The component to be separated is physically or chemically bound to a solid matter surface.

The solid matter is referred to as adsorbent and the component adsorbed on it is called adsorptive.

Depending on the application, the separated component may be product or impurity.

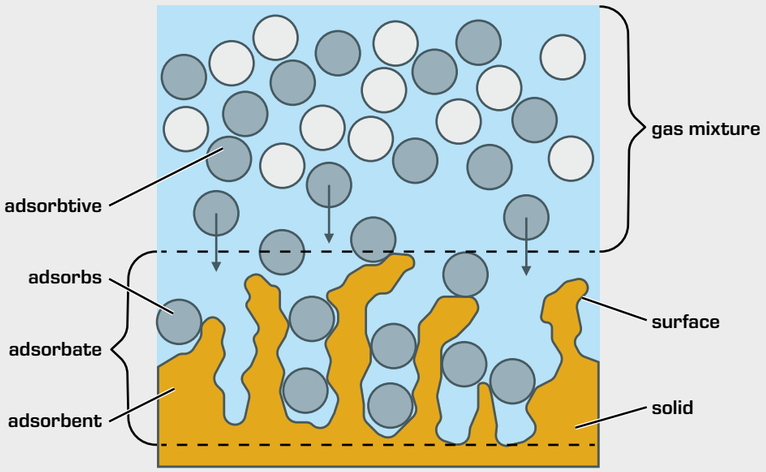

CE 540 Adsorptive air drying

Using humid air, CE 540 demonstrates the drying of gases by means of adsorption on a solid desiccant (silica gel).

- transparent adsorption columns and adsorbent with indicator
- recording of volumetric flow rate, humidity and temperature to visualise the processes in the h-x diagram and the breakthrough curve
- digital system control and data acquisition via a process control system with GUNT software

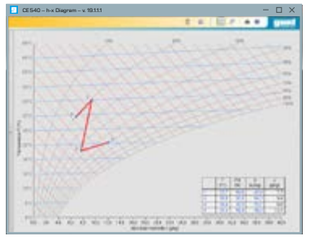

Screenshot of the GUNT software with experimental result

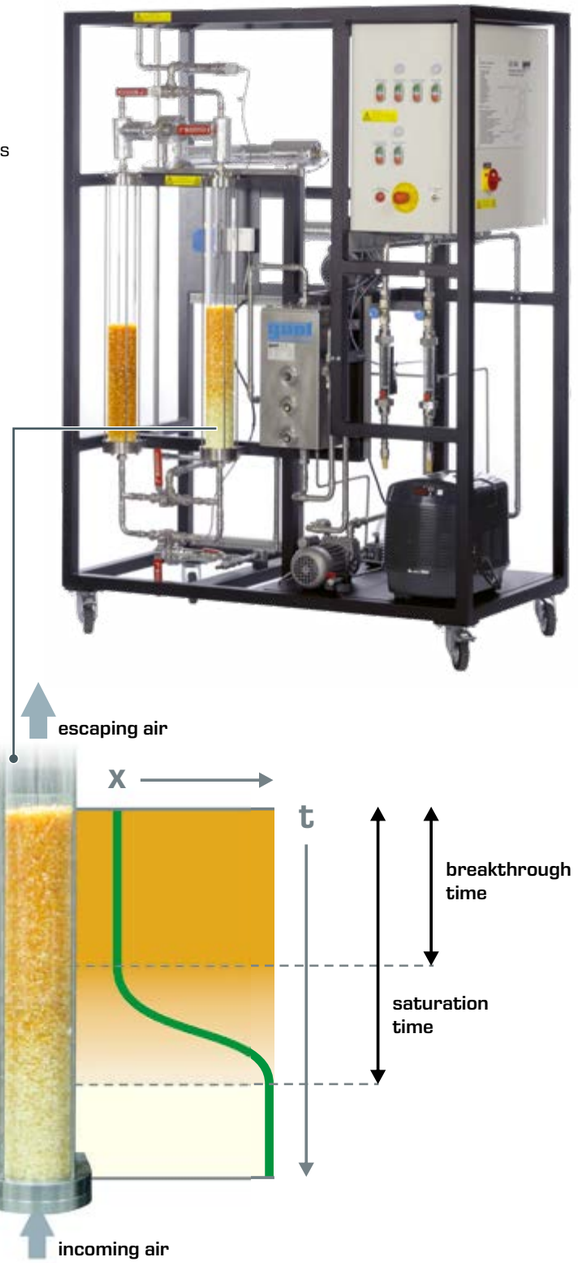

Zones in the fixed bed of an adsorption column
The transparent columns allow the observation of saturation (white colouring) and displacement of the mass transfer zone (MTZ) in the adsorbent until breakthrough.
The breakthrough curve represents the progression **t** over time of the water load **x**.

Unloaded zone
The adsorbent is still unloaded.
Adsorptive can be taken up.

Mass transfer zone (MTZ)
The adsorbent is partially loaded.
Adsorptive is taken up.

Saturation zone
The adsorbent is fully loaded.
Adsorptive can no longer be taken up.

about the product
WWW

Learning objectives/experiments

- basic principle of adsorption and regeneration of the adsorbent
- investigation of influencing variables on the adsorption and desorption process
- recording breakthrough curves and determining the time of breakthrough
- visualisation of the processes in the h-x diagram

Upstream | Midstream | Downstream

H_2 transformation: nitrogen production for synthesis of e-ammonia

For storage and more efficient transport, H_2 can be transformed into e-ammonia using nitrogen. Nitrogen obtained from air is essential for e-ammonia synthesis via Haber-Bosch process.

In the context of **H_2SKILLS**, GUNT shows common processes for nitrogen production in the industry. The processes are also used there for the purification of hydrogen.

CE 545 N_2 – Pressure swing adsorption PSA

about the product

CE 545 uses the principle of pressure swing adsorption (PSA) to produce high-purity nitrogen from compressed air.

- process stages of pressure swing adsorption: adsorption, breakthrough, desorption, regeneration
- two alternating columns with fixed bed for parallel adsorption and regeneration
- recording of temperature, pressure, volumetric flow rate and oxygen concentration for process optimisation and efficiency determination
- system control via integrated PLC with data acquisition

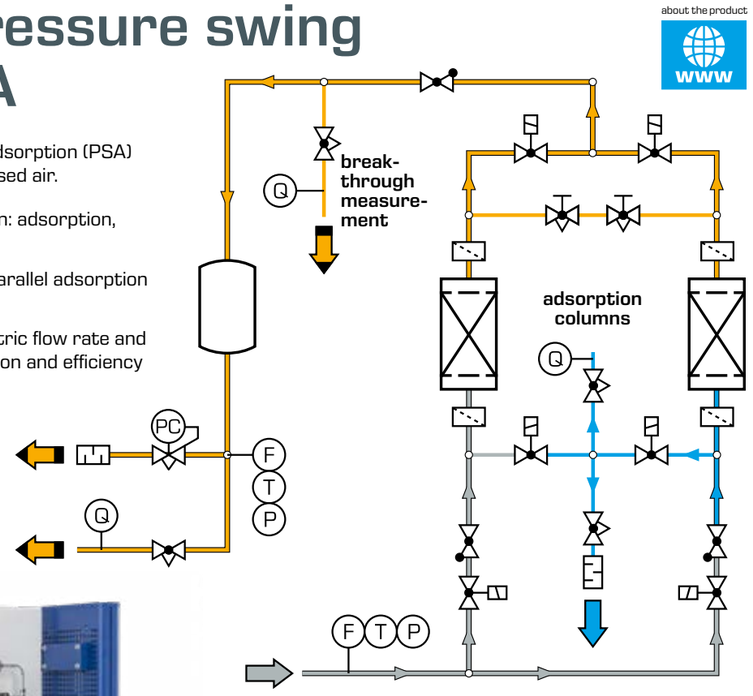

compressed air, nitrogen, oxygen
T temperature, **F** flow rate, **P** Pressure, **Q** oxygen concentration



Learning objectives/experiments

- familiarisation with pressure swing adsorption (PSA)
- determination of efficiency based on: pressure, volumetric flow rate, temperature
- investigation of the effects of volumetric flow rate and pressure level on the breakthrough measurement limit value and regeneration
- calculation of yield and productivity

Principle of operation: gas separation with hollow fibre membranes

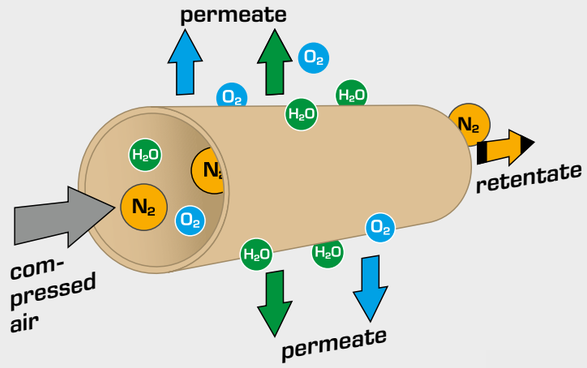

Nitrogen recovery from air using hollow fibre membranes

Hollow fibre membranes for gas separation work according to the principle of selective permeation.

For this purpose, a gas mixture is passed through the hollow fibres under pressure, making use of the property of membranes to selectively diffuse some components (permeate) and retain others (retentate).

The so-called permeation rate of each gas depends on the solubility in the membrane material and the diffusion rate of the gas.

CE 550 N_2 – Membrane separation process

The CE 550 experimental unit demonstrates a low-maintenance and efficient process for producing nitrogen from air.

- gas separation according to the principle of selective permeation
- SEPURAN® N_2 hollow fibre membranes for nitrogen recovery, purity up to 99.5%
- system control via integrated PLC with data acquisition and visualisation of operating parameters



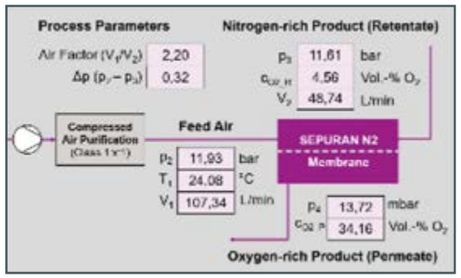

Screenshot of the PLC

about the product

Learning objectives/experiments

- familiarisation with selective permeation through the membrane surface
- effects of the parameters on pressure loss in the membranes and the air factor
- setting the process parameters in the air supply, retentate and permeate
- measurement of residual oxygen in the retentate and permeate

Upstream | Midstream | Downstream

MT 220
Assembly station gas booster in hydrogen technology

Compressors are indispensable for the utilisation of hydrogen. They compress the hydrogen after electrolysis and thus enable space-saving storage and efficient transport, for example.

The MT 220 assembly station contains an industrial gas booster from hydrogen technology, which is installed in a pipe section with various fittings.

The individual exercises on the assembly station are carried out by students themselves according to specifications:

- preparation of pipes and connections
- practical assembly of pipes and fittings
- commissioning of the gas booster and maintenance work
- real leak test

about the product



Augmented reality for the gas booster

An augmented reality interface (Vuforia View) is available for mobile devices to visualise the processes and functions in a gas booster.

The GUNT Skills Media Center

Digital data packages are available on GUNT's own didactic platform:

- 3D representation
- engineering drawings
- detailed manuals
- videos
- exercises with password-protected solutions

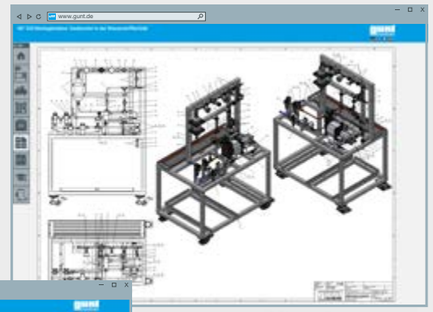

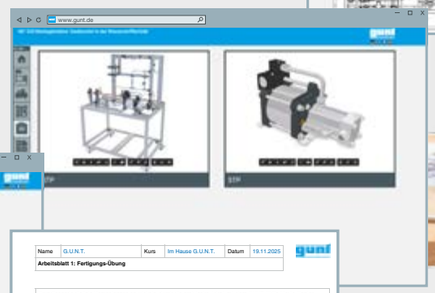

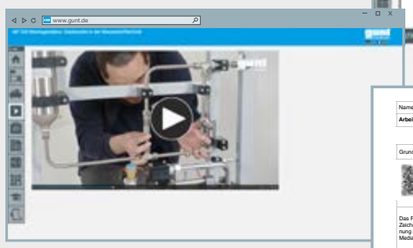



Name G.U.N.T. Kurs Im Hause G.U.N.T. Datum 19.11.2025

Arbeitsblatt 1: Fertigungs-Übung

Grundlegende digitale Kompetenzen entwickeln, durch die praktische Arbeit mit dem GUNT Skills Media Center.

Im GUNT Skills Media Center erhältst du Anleitungen, PDF-Arbeitsblätter, Zeichnungen, Stücklisten, 3D-Konstruktionsdateien und weiteres Informationsmaterial.

http://media-center.gunt.de/de/

Das Rohrleitungselement in der rechts dargestellten Zeichnung soll hergestellt werden. Du findest diese Zeichnung in den Formaten DXF und PDF im GUNT Skills Media Center.

Im GUNT Skills Media Center klicke nacheinander die Folgenden Elemente an, um zu dieser Zeichnung zu gelangen.

Aus den aufgelisteten Zeichnungen öffnest Du das PDF-Dokument der rechts dargestellten Pos. 110.

Finde heraus:

Welchen Durchmesser hat das gezeichnete Rohr?	6mm
Wo ist diese Information zu finden?	In der Zeichnung
Aus welchem Material soll das Rohr gefertigt werden?	1.4404 (Edelstahl)
Wo ist diese Information zu finden?	Im Schriftfeld

Auf der Rückseite der Montagestation findest du eine Ablage für Halbzeuge, in welcher sich vorgefertigte Rohre zur weiteren Bearbeitung befinden.
Finde dort ein passendes Rohr (übereinstimmend mit Material und Durchmesser). Schätze ab, wieviele der obigen Rohrleitungselemente aus diesem Rohr gefertigt werden können.

Ein ungekürztes Rohr hat eine Länge von 1000mm. Das Rohrleitungselement hat eine gestreckte Länge von etwa 263,5mm. Somit können drei aus diesem Rohr gefertigt werden.

MT 220 11/2025 V 1.0 DE Seite 1/2



Learning objectives

- learning in an industry-like environment for training in the field of hydrogen technology
- design and function of a single-stage gas booster with pneumatic drive
- familiarisation with the special features of hydrogen applications
- read and understand engineering drawings and technical documentation

Upstream | Midstream | Downstream

MT 220 Assembly of a pipe section with industrial gas booster and various valves and fittings



Pipe preparation



marking



cutting to length using a jig

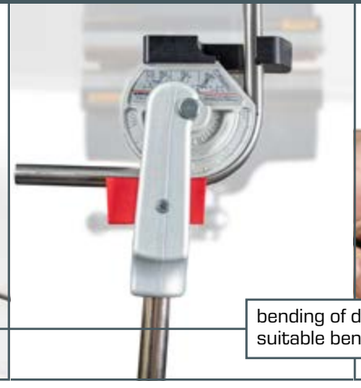

bending of different pipes using suitable bending tools

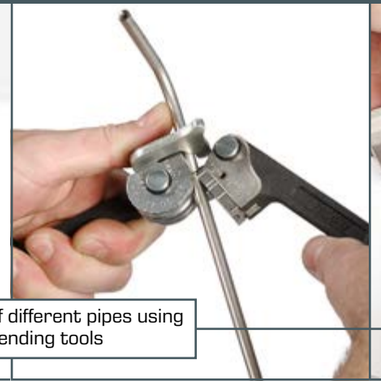

checking the bending angle

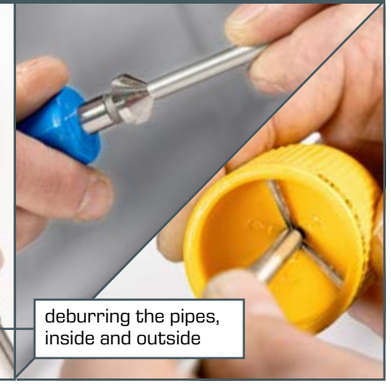

deburring the pipes, inside and outside

Assembly



The students assemble the connection lines for the gas booster and pipe sections with various valves and fittings.



pipe section with components for hydrogen applications: measuring, control, shut-off and safety valves

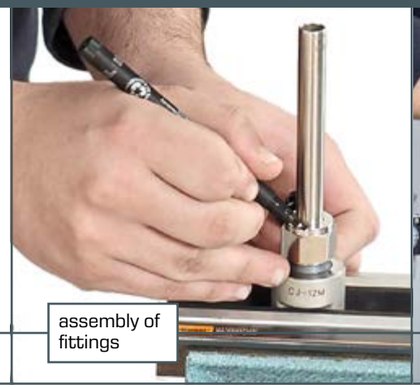

assembly of fittings

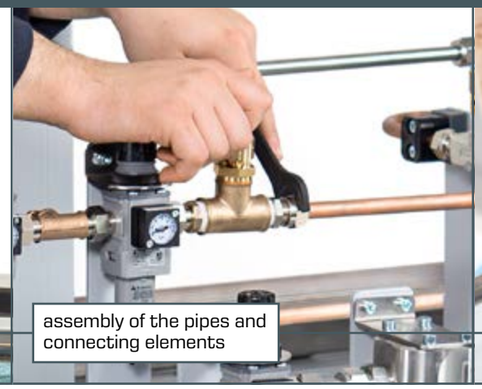

assembly of the pipes and connecting elements



mounting the measuring fittings



Commissioning and maintenance



The single-stage gas booster is pneumatically driven with compressed air. Compressed air is used instead of H_2 to operate the gas booster. The advantage is simple and safe operation of the pipe section and the gas booster.

Leak test





Real leak test with leak detection spray or leak detector. The accessories for both leak tests are included in the scope of delivery. The forming gas for leak detection must be provided by the customer.

Exercises

- professional preparation and execution of pipe assembly
  - sawing, deburring, bending pipes
  - assembly of cutting ring and clamping ring fittings
  - fitting seals
- using hydrogen technology components: valves, fittings, seals, safety devices
- commissioning and leak test
- maintenance work on the gas booster

Upstream | Midstream | **Downstream**

about the product

ET 292
Fuel cell system

In networked energy supply systems, hydrogen serves as an energy store to provide electrical energy when required. Fuel cells are used to convert the chemical energy of the hydrogen back into electrical energy and water.

The main component of ET 292 is a polymer membrane fuel cell that is operated in a combined heat and power system. The system is supplied with high-purity hydrogen from a pressurised gas tank on the anode side and with oxygen from the ambient air on the cathode side. The fuel cell is operated by either current or voltage via an integrated electronic load.



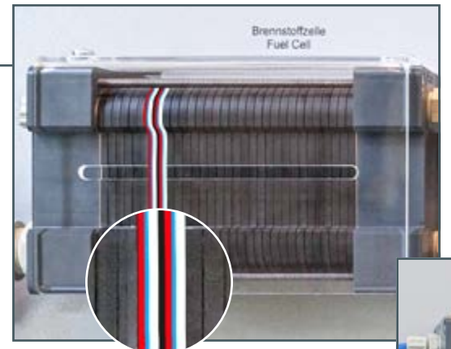

anode
cathode
membrane
cooling channel

PEM fuel cell (proton exchange membrane) with proton-conducting membrane. The fuel cell consists of 30 individual cells and has a rated electrical output of 300 W. Stacked individual cells are also referred to as a "stack".

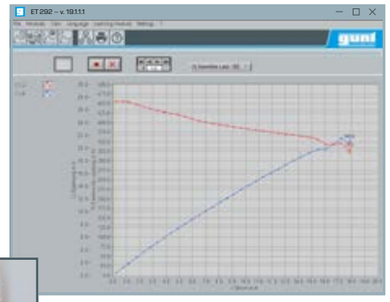

The setpoint of the electronic load enables precise adjustment of all operating points and very accurate recording of characteristics.



The opening in the cover provides space for measuring individual cell voltages using a voltmeter.

The GUNT Skills Media Center

MEDIA center SKILLS

Digital data packages are available on GUNT's own didactic platform.

Learning objectives/experiments

- function and design of a fuel cell system
- relationships of fuel cell operating parameters
- effects on the electrical output of fuel cells
- recording and visualisation of all relevant voltage/current characteristics
- calculation of relevant characteristic variables

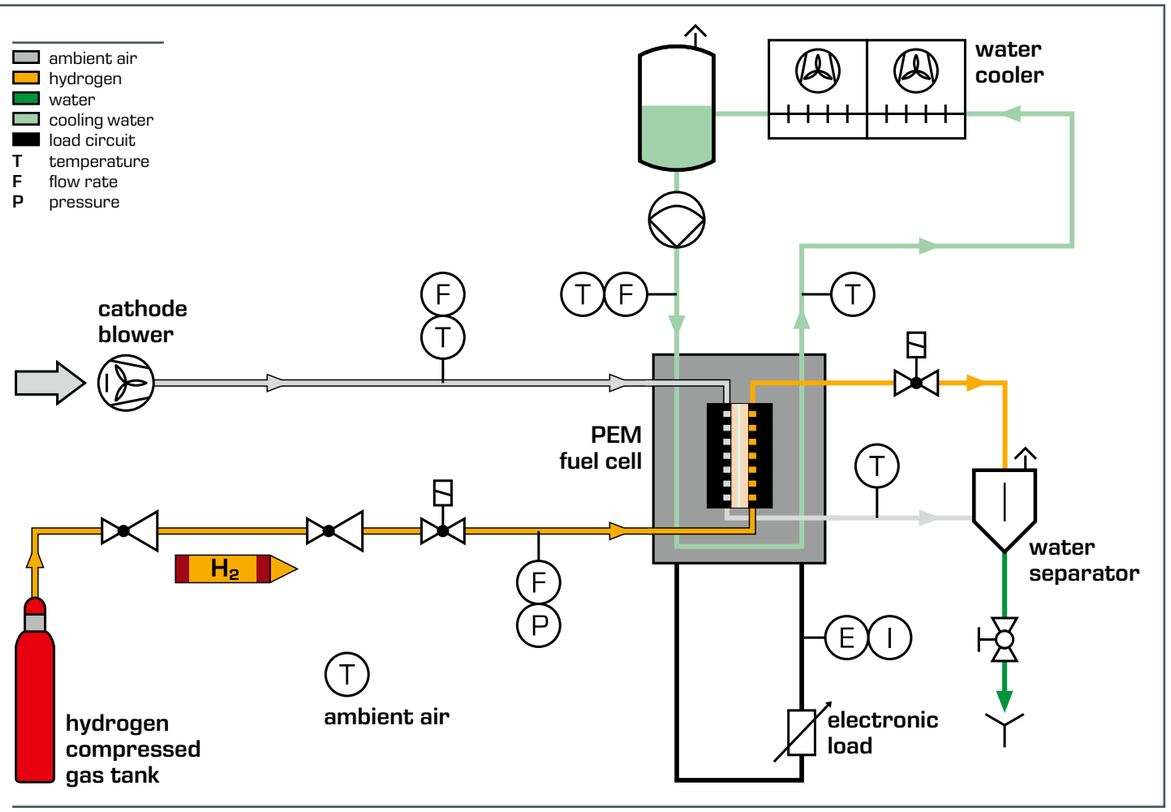

GUNT devices along the value chain

Devices from GUNT are characterised by:

- intuitive operating concept, suitable for school and university education and company training
- modular design: supplement your laboratories with different tasks (electronics, control engineering, mechanics)
- safety equipment: environmental and plant safety made easy to understand
- efficient diagnostics: measurement and monitoring tools for practical analyses

Learning objectives:

- understanding the value chain of green hydrogen (production, purification, consumption)
- expertise in electronics, thermodynamics, control engineering and safety in the context of hydrogen technology
- hands-on learning through practical exercises and projects

Advantages for your education: future-oriented and motivated students

Upstream			Midstream			Downstream
Renewable energies	**Water purification**	**Electrolysis**	**Purification**	**Transformation**	**Transport & storage**	**End use**
ET 255 Energy system for solar and wind power renewable energy supply for production of green H_2	**ET 280 Modular electrolyser for H_2 (AEM)** reverse osmosis and ion exchange	AEM elektrolysis, stack with 24 cells	—	—	pressure reducers, transport via pipes	flaring of H_2, engery balance
ET 255.02 Photovoltaic modules	**ET 278 Principles of the H_2 circuit (PEM)** PEM electrolysis	drying of H_2 by adsorption, transparent components		—	pressure reducers, transport via pipes, buffer tank	PEM fuel cell and halogen lamp as electrical consumer
ET 255.04 Wind power plant	**ET 282 Industrial electrolyser for H_2 (PEM)** ion exchange, conductivity analysis	PEM electrolysis, stack with 18 cells, monitoring of individual cell voltages	drying of H_2 by adsorption with recording of remaining service life	—	bottling H_2 into gas cylinders, storage, pressure reducers	
	CE 585 Water purification process multi-stage plant on an industrial scale		**CE 540 Adsorptive air drying** regeneration of adsorbent, transparent adsorption columns		**MT 220 Assembly station gas booster** assembly of pipe sections and fittings, leak tests	**ET 292 Fuel cell system** PEM fuel cell, stack with 30 cells, monitoring of individual cell voltages
	CE 530 Reverse osmosis adjustment and measurement of conductivity		**CE 545 N_2 – Pressure swing adsorption PSA** drying of gases, continuous process	nitrogen production from air for e-ammonia production	**CE 810 Gas booster in hydrogen technology** pneumatic drive, single-stage piston compressor	
	CE 300 Ion exchange adjustment and measurement of conductivity		**CE 550 N_2 – Membrane separation process** drying of gases, continuous process, selective permeation	nitrogen production from air for e-ammonia production	**CE 815 Components and fittings in hydrogen Technology** models of typical components	

H_2SKILLS
www.gunt.de



Contact

G.U.N.T. Gerätebau GmbH
Hanskampring 15-17
22885 Barsbüttel
Germany

+49 40 670 854-0
sales@gunt.de
www.gunt.de

Visit our website
www.gunt.de